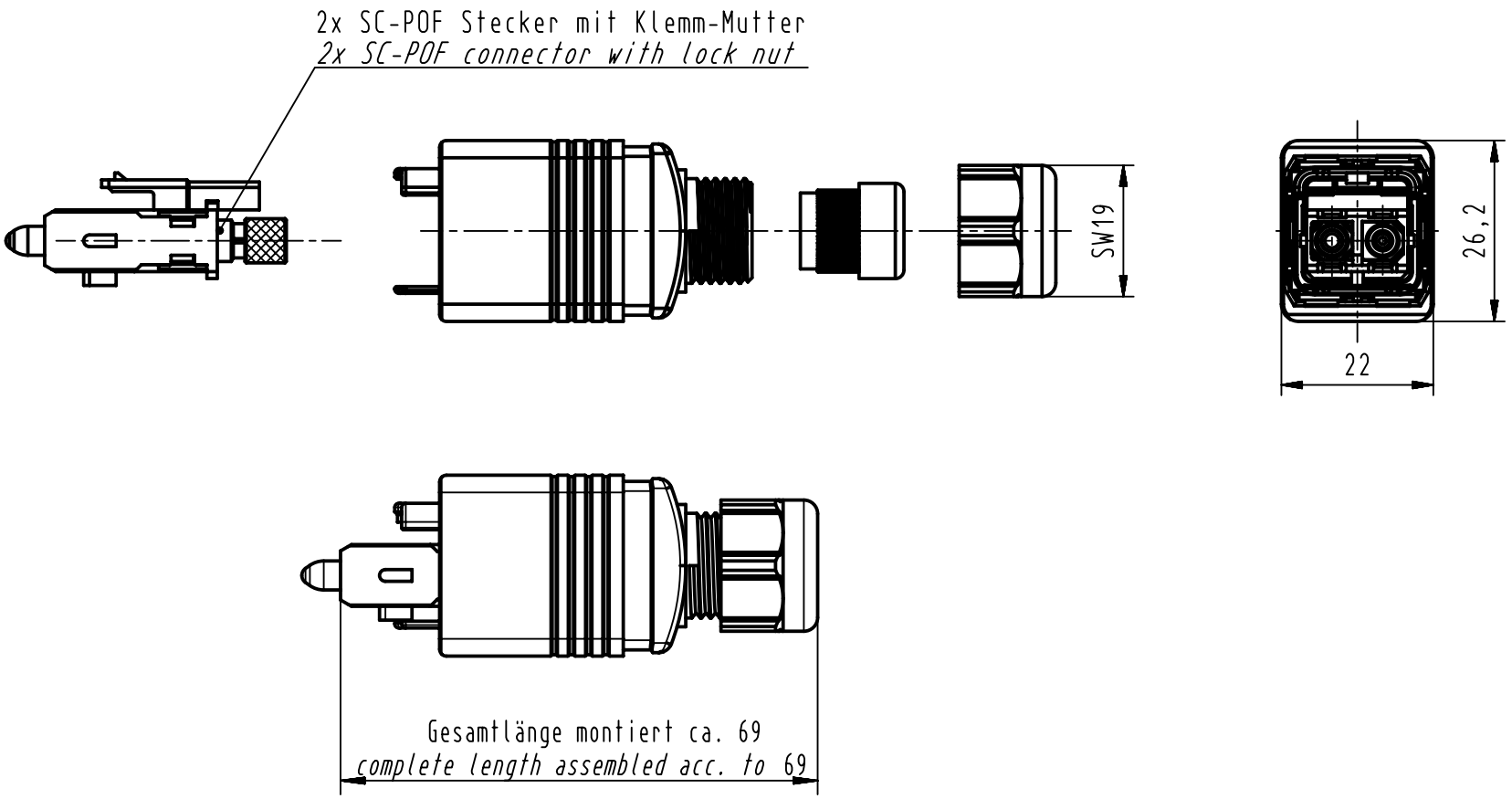

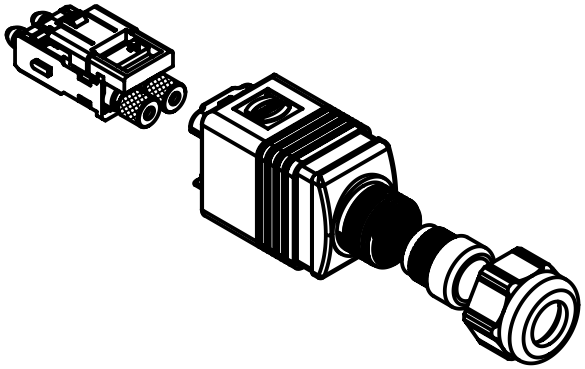

All Dimensions in mm Original Size DIN A4	Scale 1:1	Free size tol.		Ref. Sub. TB 09 35 241 0421 Mod.35981 vom 24.08.10	
All rights reserved Department EC PD - DE	Created by ZWAHR	Inspected by ELLERMANN	Standardisation HOFFMANN	Date 2012-12-12	State Final Release
HARTING Electronics GmbH D-32339 Espelkamp	Title Han PushPull SCRJ POF Plastic				Doc-Key / ECM-Nr. 100194352/UGD/002/B 500000056362
	Type TB	Number 09352410421		Rev. B	Page 1/1

A4