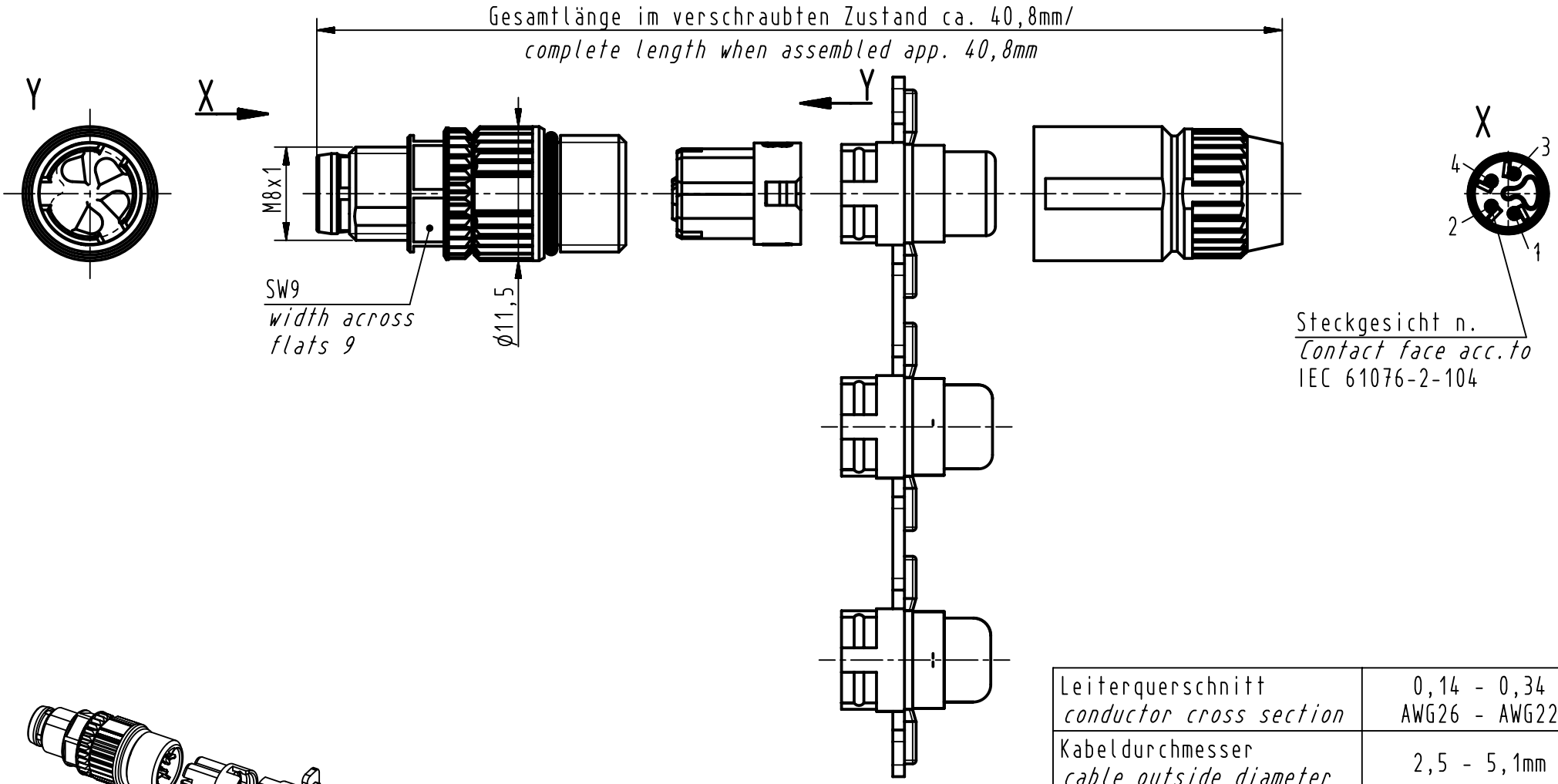

Leiterquerschnitt *conductor cross section*	0,14 - 0,34 AWG26 - AWG22
Kabeldurchmesser *cable outside diameter*	2,5 - 5,1mm

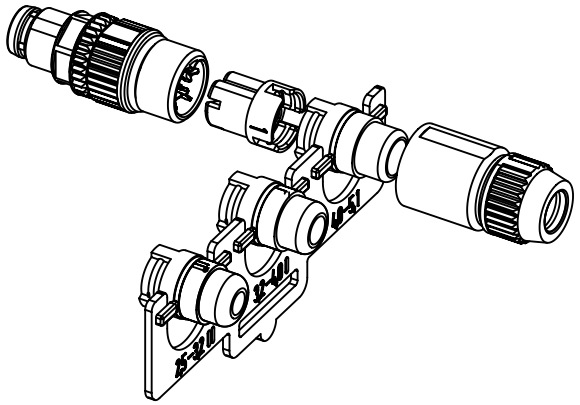

All Dimensions in mm
Original Size DIN A4

Scale 2:1

Free size tol.

Ref.

Sub.

All rights reserved

Department EC PD - DE

HARTING Electronics GmbH
D-32339 Espelkamp

Created by	Inspected by	Standardisation	Date	State
DYCKC	WELLMANN	HOFFMANN	2013-01-22	Final Release

Title HARAX M8-S male 4-pole

Doc-Key / ECM-Nr.
100218268/UGD/003/B
500000052288

Type TB

Number 21021511405

Rev. B

Page 1/1

A4