DO NOT SCALE
DIMENSIONS IN mm

METRIC

THIRD ANGLE PROJECTION

P.C.B. HOLE DIM. ACTION PIN				
DRILLED HOLE	1,15	±0,025		mm
FIN. HOLE	0,94	to	1,09	mm
AFTER REFLOW	0,91	to	1,09	mm
Cu-thks	0,025	to	0,075	mm
SnPb-thks	0,004	to	0,010	mm

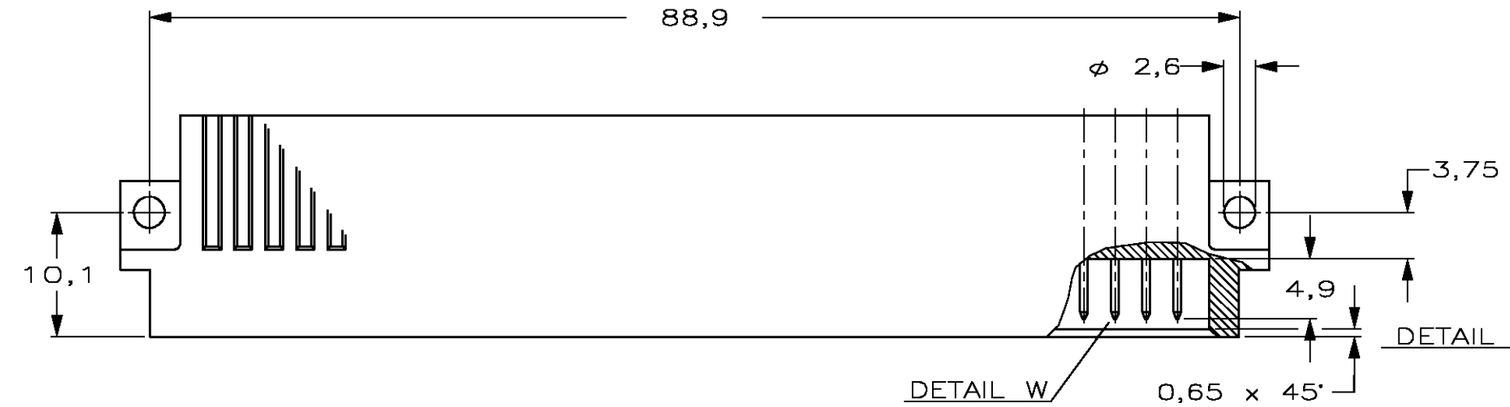

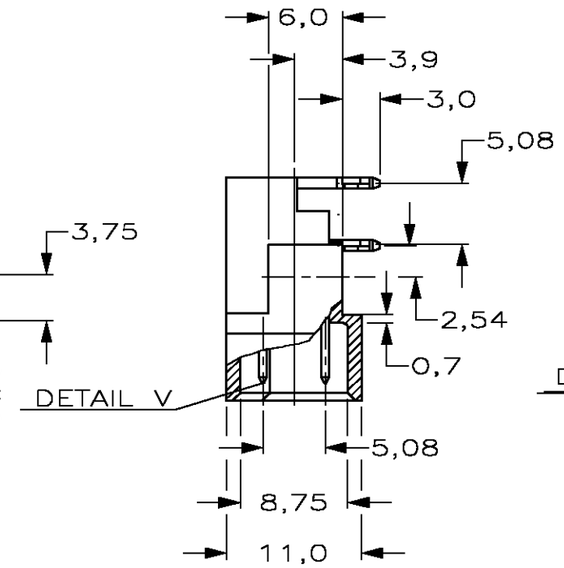

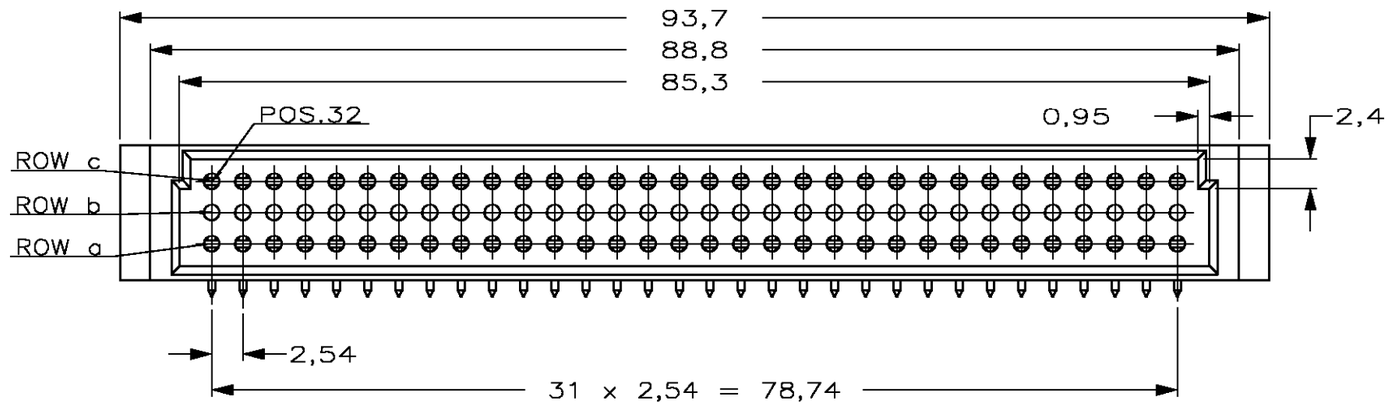

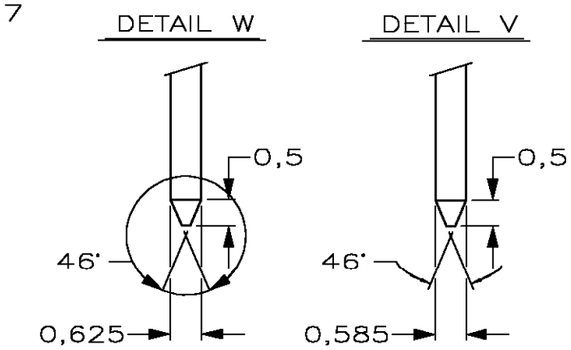

ROW	POS.																															
c	32	31	30	29	28	27	26	25	24	23	22	21	20	19	18	17	16	15	14	13	12	11	10	9	8	7	6	5	4	3	2	1
b	o	o	o	o	o	o	o	o	o	o	o	o	o	o	o	o	o	o	o	o	o	o	o	o	o	o	o	o	o	o	o	o
a	X	X	X	X	X	X	X	X	X	X	X	X	X	X	X	X	X	X	X	X	X	X	X	X	X	X	X	X	X	X	X	X

AN ASTERISK ,,X'' DENOTES A CONTACT.

NOTES:

1. MATERIAL:
   - HOUSING: THERMOPL.POLYESTER
     COLOUR : GREY
   - CONTACTS: PHOSPHORBRONZE
2. PLATING CONTACT :
   - 1 : AT CONNECTOR MATING SIDE Au OVER Ni, PERFORMANCE LEVEL I, ACC. IEC 603-2. SnPb AT ACTION-PIN.
   - 4 : AT CONNECTOR MATING SIDE Au OVER Ni, PERFORMANCE LEVEL II, ACC. IEC 603-2. SnPb AT ACTION-PIN.

	FINISH	MATERIAL	PARTNUMBER
OBSOLETE	SEE NOTE 2	SEE NOTE 1	~~216432-8~~
OBSOLETE	SEE NOTE 2	SEE NOTE 1	~~216432-7~~
	SEE NOTE 2	SEE NOTE 1	216432-4
	SEE NOTE 2	SEE NOTE 1	216432-1

LTR.	REVISION RECORD	DR.	CHK.	DATE
—	—	-	-	-
—	—	-	-	-
—	—	-	-	-
—	—	-	-	-
C	SR10-0227-02	BC	BC	06-Apr-'02
B	EH-0831-97	J.G.	J.G.	28-07-97
A	H-8830	R.v.L	J.v.G	29.07.91

CUSTOMER DRAWING — FOR REFERENCE ONLY WILL NOT BE UPDATED

© COPYRIGHT 19 - BY Tyco Electronics EC N.V.
ALL INTERNATIONAL RIGHTS RESERVED.Tyco PRODUCTS MAY BE COVERED BY U.S. AND FOREIGN AND/OR PATENTS PENDING.

THIS DRAWING IS UNPUBLISHED
~~RELEASED FOR PUBLICATION - ,19 -~~

tyco Electronics — Tyco Electronics EC N.V. Oostkamp - Belgium

NAME: 64 POS. DIN 41612 TYPE C MALE CONN. WITH ACTION-PIN FOR 1,6 P.C.B. THK'S

DR.: Colpaert B.	CHK.: Colpaert B.	APP.: Colpaert B.	DWG.No.	REV.LTR.	SHEET	
DATE: ———	DATE: -	DATE: -	C- 216432	C	1 OF 1	A3

8 7 6 5 4 3 2 1